PRELIMINARY DATA SHEET

GrapheneGPU
PCS 50

- Peak Shaving Capacitor Shelf (PCS)
- 48 VDC nominal bus voltage
- 60 kW peak power
- ORV3 compatible, 1OU high
- Air-cooled
- Intelligent control and integrated BMS
- Lithium-free supercapacitor energy storage based on Skeleton Technologies patented Curved Graphene technology

General Specifications

	Value	Unit
Electrical		
Nominal output voltage	48	V (DC)
Output voltage operating area	44.0 - 54.6	V
Continuous output power	40	kW
Peak output power	60	kW
Usable capacity At rated power	100	kJ
Peak efficiency	98	%
Energy storage max. voltage	96	V

Dynamic Performance

	Value	Unit
Current slew rate	20	A/µs
DC/DC switching frequency	500	kHz

Standards and Approvals

UL1973
UL810A
UL9540A
IEC 62368-1
EN 61000-6-2
EN 61000-6-4
EN 60068-2-6
EN 60068-2-27

Communication Interfaces

Communication interfaces	2x Ethernet 1x CAN 1x RS-485
Ethernet protocols	Redfish
CAN protocols	Custom*
RS-485 protocols	Custom*
I/O	4x Analog input 0-10 V 2x Digital input 2x Relay output, max 48 V, 700 mA
Other communications	Sync link for parallel operation of PCS units IShare

Physical Parameters

	Value	Unit
Target installation	21” ORV3	
Weight	20	kg
Dimensions, L x W x H	867.5 x 537 x 46.2	mm
Height	1 OU	

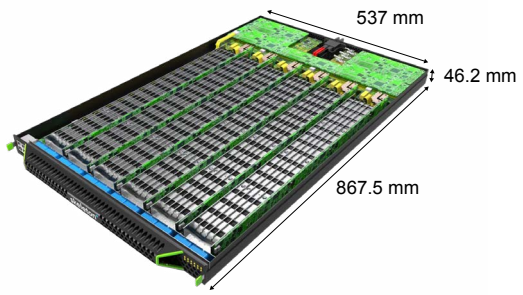

*Customer-specific development as agreed
All information is preliminary and subject to change without prior notice.

Copyright © 2025 Skeleton Technologies GmbH. All rights reserved.

skeleton+

Block Diagram

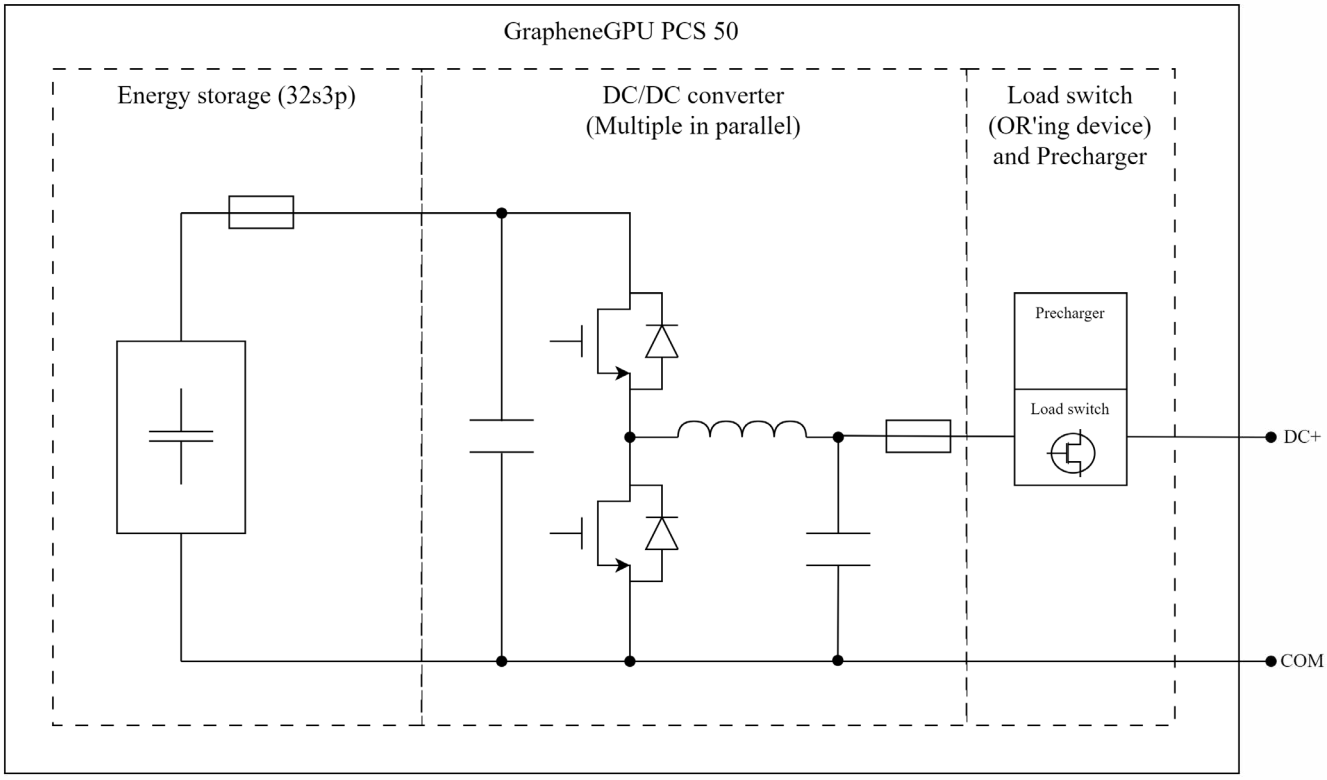

All information is preliminary and subject to change without prior notice.
Copyright © 2025 Skeleton Technologies GmbH. All rights reserved.